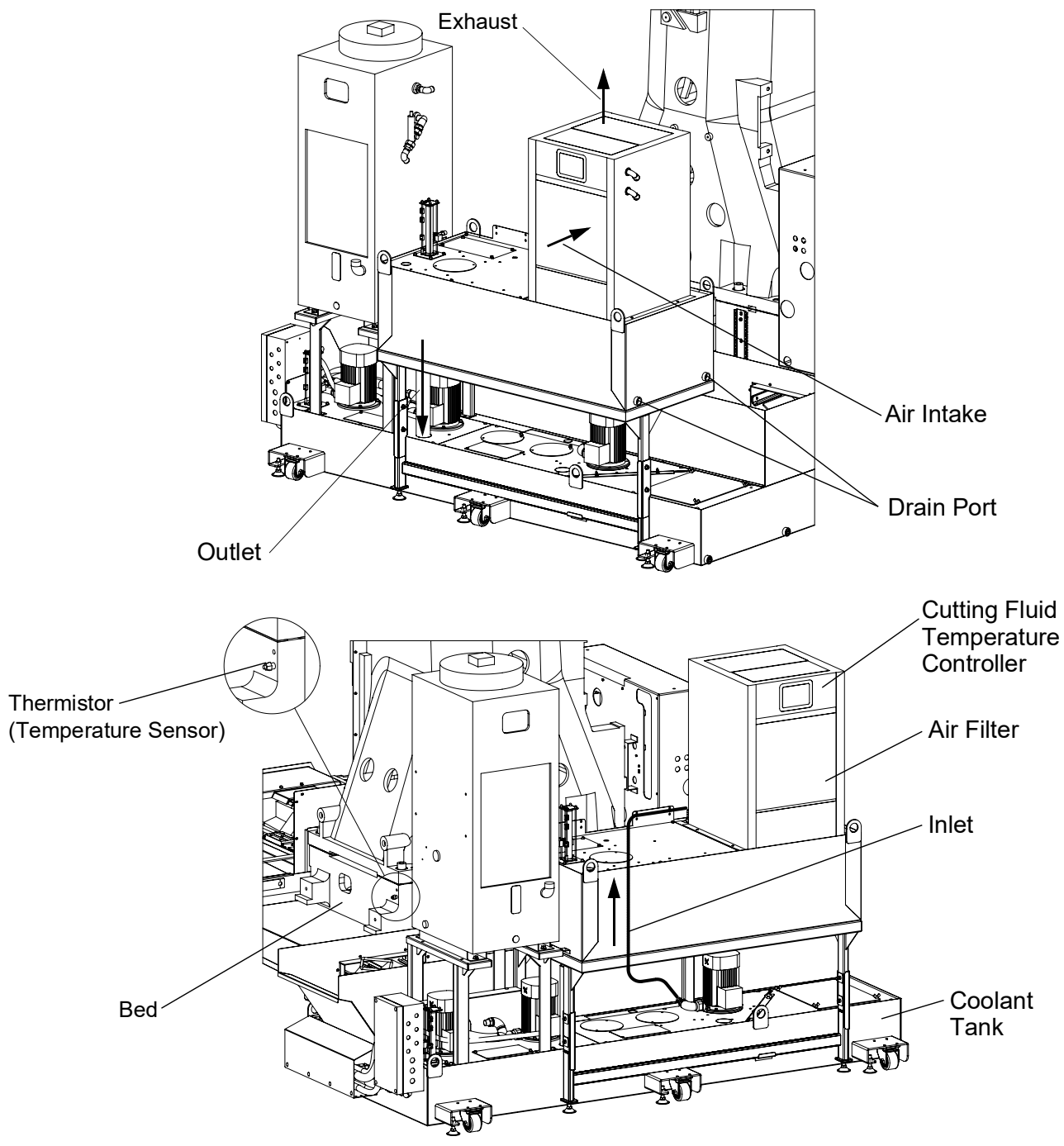
Exhaust
Air Intake
Drain Port
Outlet
Cutting Fluid
Temperature
Controller
Thermistor
(Temperature Sensor)
Air Filter
Inlet
Bed
Coolant
Tank